CEELITE®
Technologies, LLC
Inspired by Edison, Reinvented by CeeLite

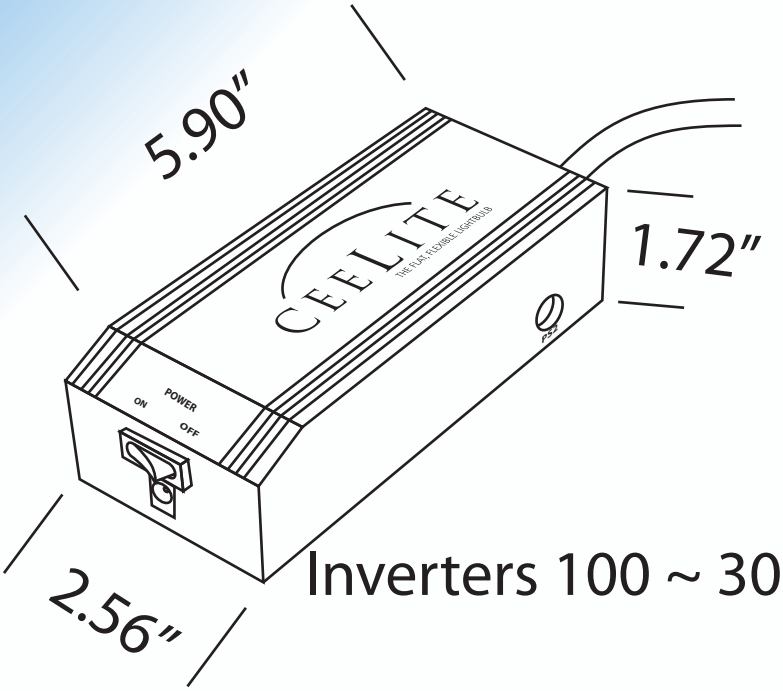

Inverters 100 ~ 300

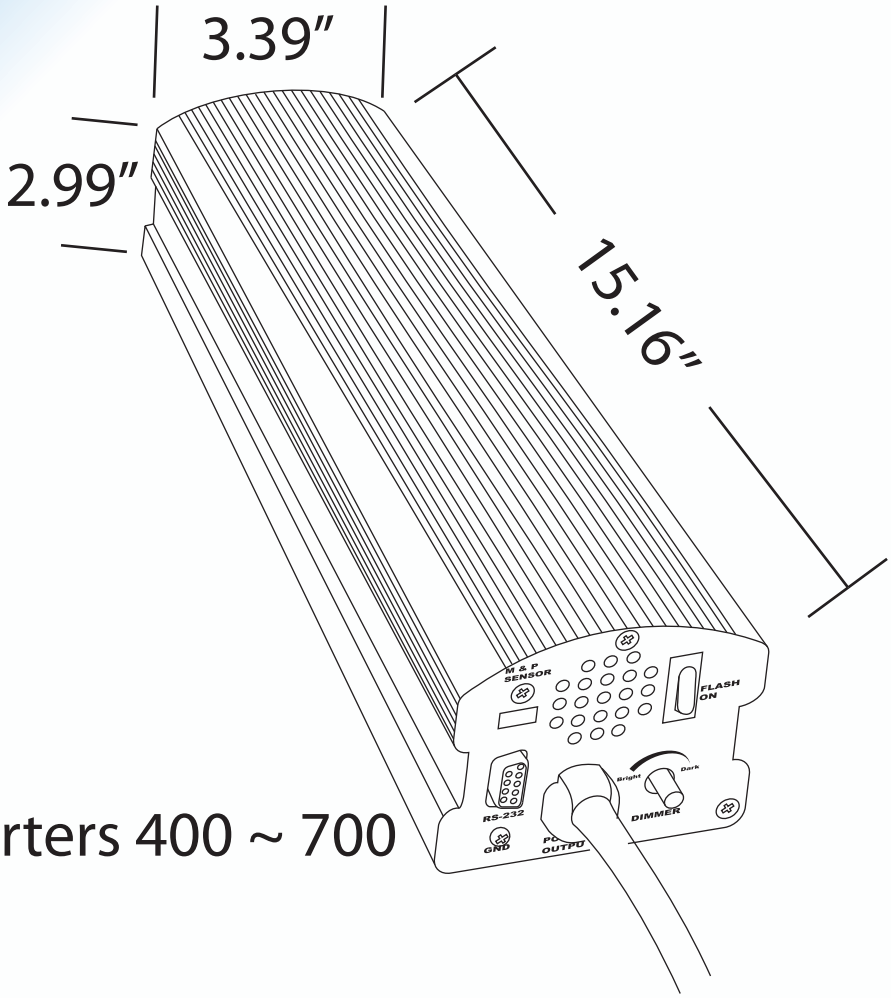

Inverters 400 ~ 700